The VAAC Harrier and H_∞ Loop Shaping - What Did We Learn?

Rick Hyde

23-24th Sept 2013

2nd Workshop on Control of Uncertain Systems, Cambridge UK

The research was funded by SERC and RAE Bedford

Overview

- Revisit first flight test
- Top lessons learnt (control)
- Challenges in system design (tools, process)

First (gain-scheduled) H_∞ controller flight test

- FCL005 first flight Dec 1993
  - No instabilities $\varepsilon = 0.4$
  - Fast engagement system
  - HUD issues
  - One important modelling issue….

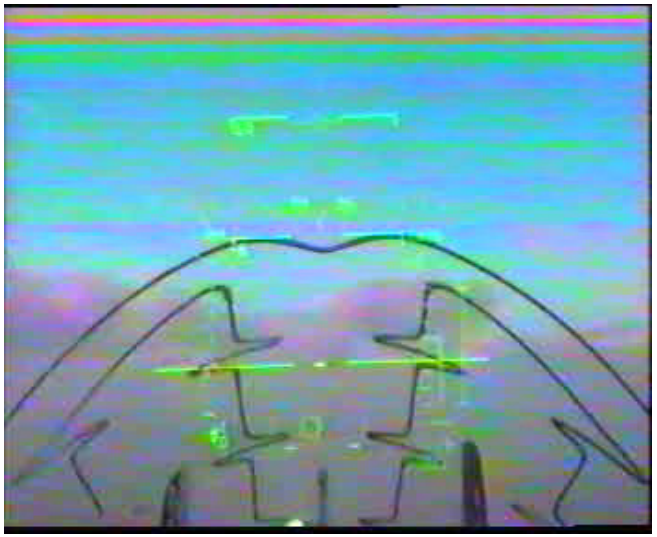

Model validation – flight F1593 12/10/99

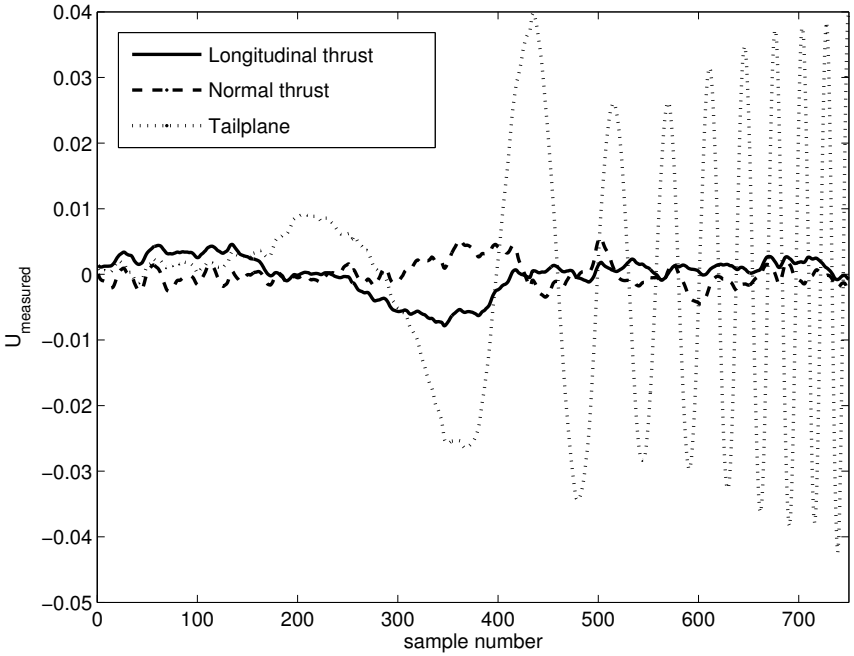

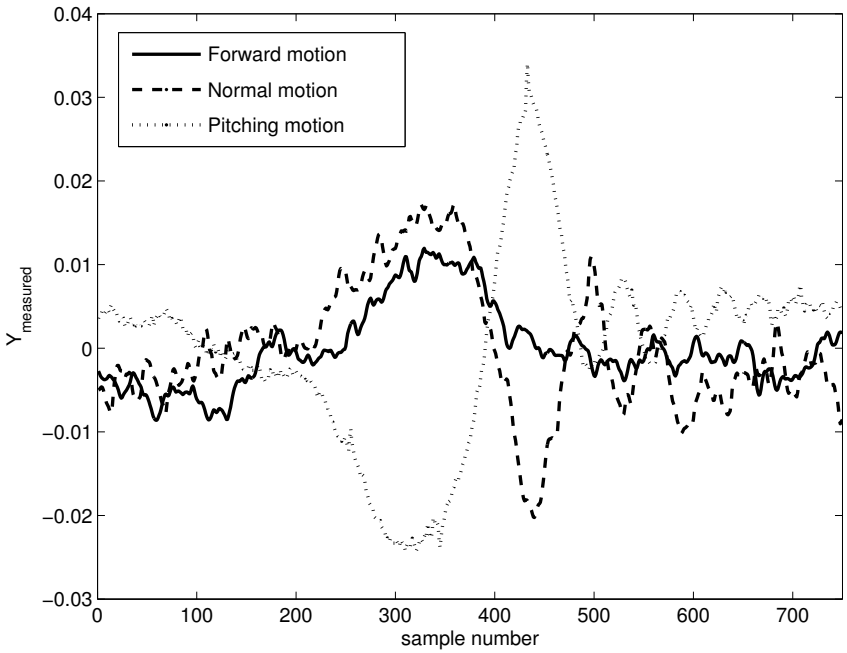

- Model invalidation 1999

$$\gamma_{\min} = 0.066$$

Top lessons learnt

- Lesson 1: Some deltas are really just too big….
  - "Ah, we forget to tell you the aircraft's normal accelerometer sign is positive up!" *[unlike the model]*

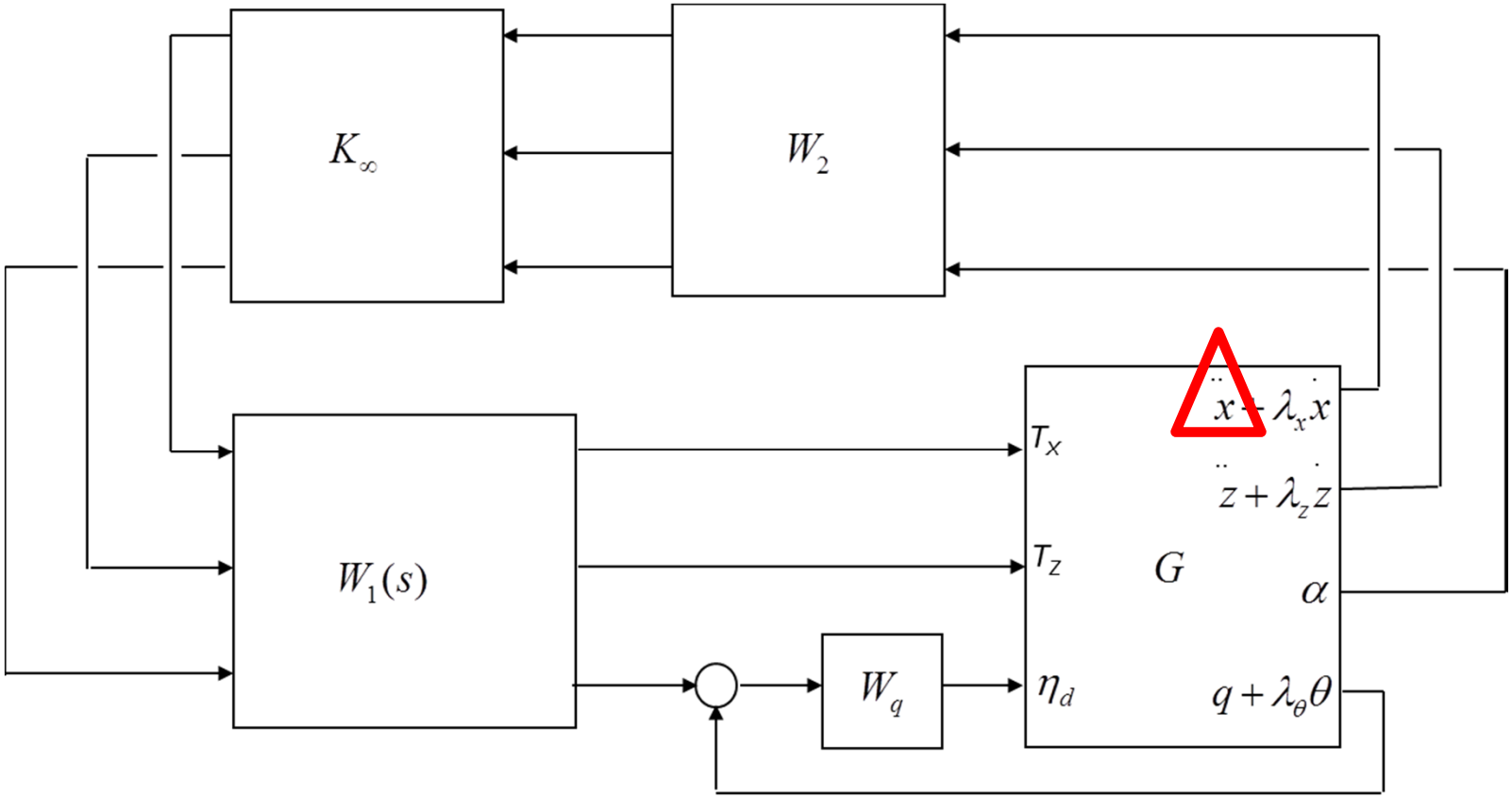

Top lessons learnt

- Lesson 2: Plant input-output scaling is critical
  - It shapes the multivariable uncertainty
  - It impacts the level of decoupling achievable
- Lesson 3: Composite measurement signals are extremely useful
  - On FCL005:
    - $\ddot{x} + \lambda_x \dot{x}$
    - $\ddot{z} + \lambda_z \dot{z}$
    - $q + \lambda_\theta \theta$
  - Loop-shaping by weighted combinations of measurements
  - Used by Boeing

Top lessons learnt

- Lesson 4: Feedback architecture is really important
  - FCL005 has inner-loop pitch rate feedback
  - Don't use MVC unless loops operate at similar frequencies

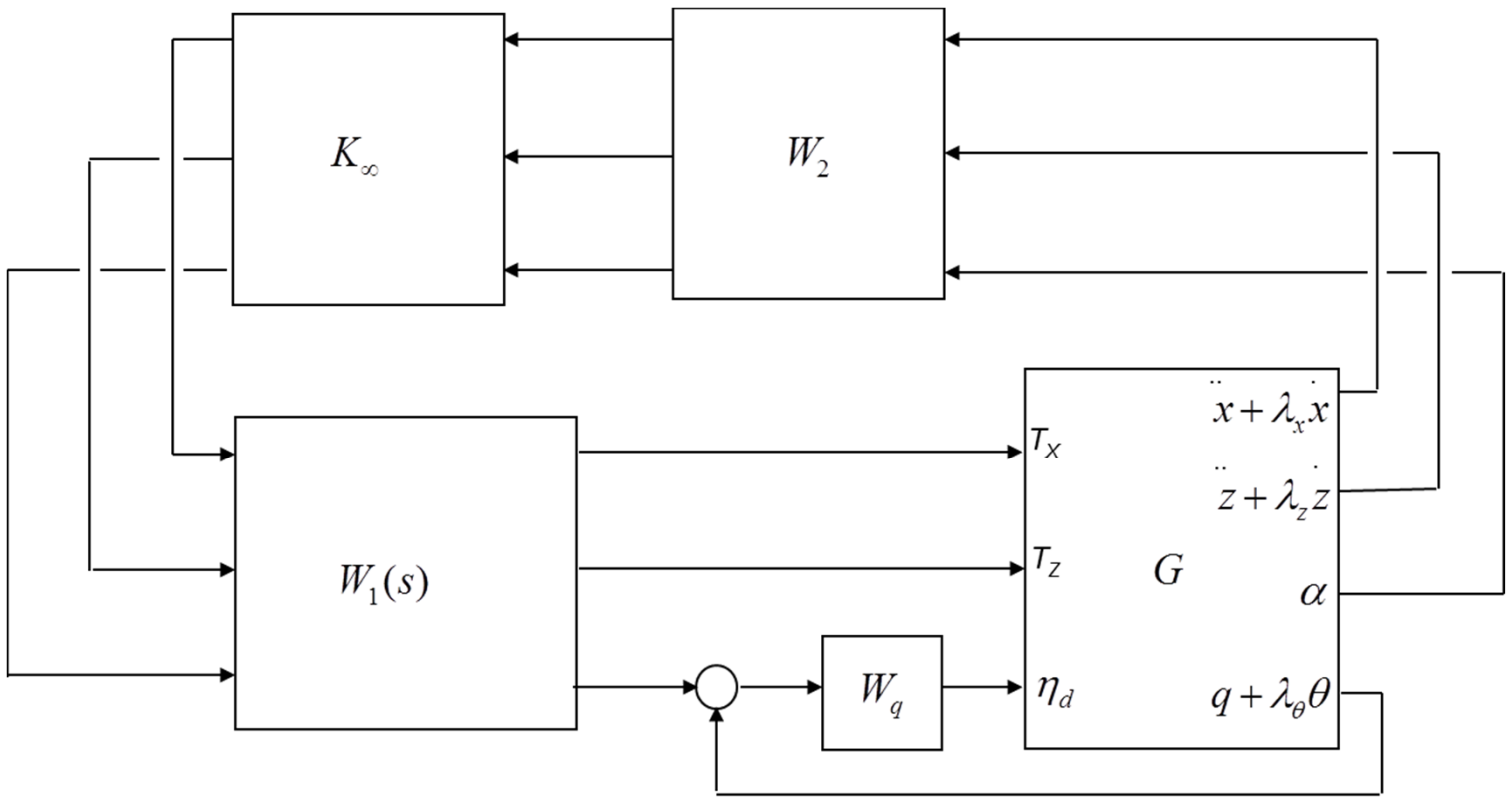

Top lessons learnt

- Lesson 5: Use nonlinear dynamic inversion with care
  - Exact inversion of the controls term is not always the best thing to do
    - Papageorgiou & Glover CDC 1997 – inversion only if condition number close to 1
    - Papageorgiou & Hyde AIAA GNC 2001 – stability assessment of NDI
    - Cleminson & Hyde AIAA GNC 2004 – NDI and H-infinity applied to square cross-section missile

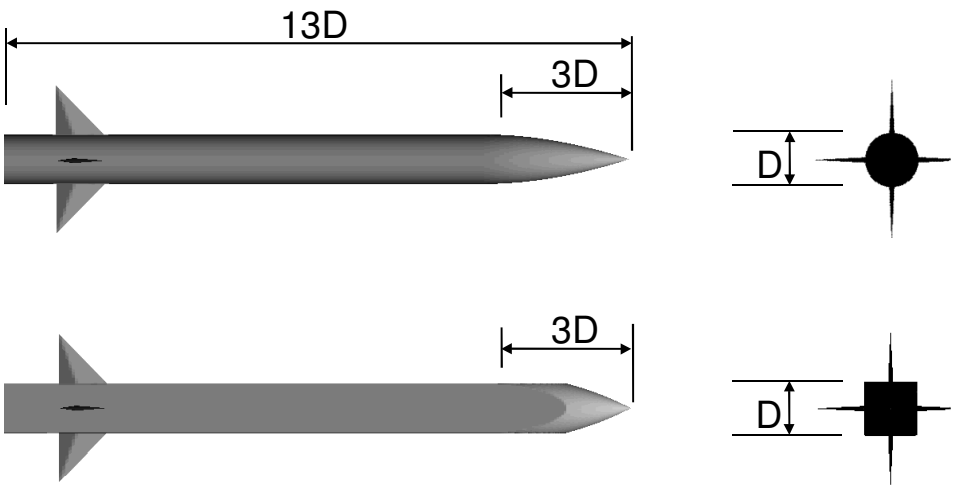

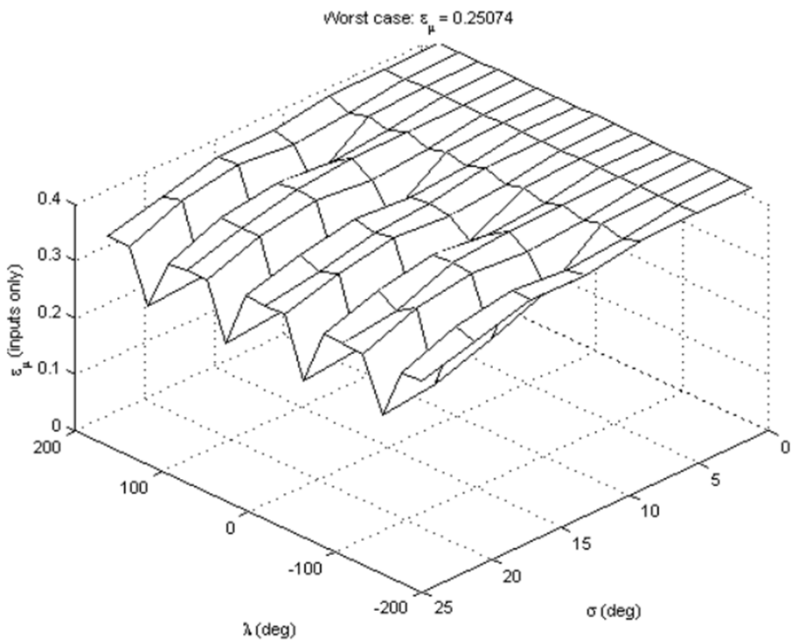

Top lessons learnt

- Lesson 6: There is no substitute for careful plant modelling
  - VAAC – had reasonable model, but not knowledge of what was in the model.
  - Later Simulink representation made model more accessible.
- Lesson 7: H-infinity loop shaping is hard to beat
  - Hard to get a bad controller
  - Applications:
    - Harrier
    - GARTEUR benchmarks
    - Missile airframes (many – when at BAE Dynamics and later working with DERA).

Changes in tools and processes

1993

- Controller design using MATLAB® and custom scripts
- Functional requirements in FORTRAN
- Flight code in CORAL66
- V&V not practical – safety pilot system instead

1999

- Controller design using MATLAB® and Mutools
- Functional requirements in Simulink™
- Flight code from Real-Time Workshop™
- Some V&V using MATLAB scripts

Changes in tools and processes

2013

- Executable specification
- Simulink Coder
  - Very efficient code
  - Customizable
- Simulink Verification & Validation
- DO Qualification kit
- Simulink Design Verifier
- ***Hand coding seen as unreliable and unaffordable***

Impact of Simulink on process

- *Simulink enables a dialogue between the algorithm and software engineers*
- *More time is now spent ensuring that the functional requirements are correct*

Impact of Simulink on process

Decisions involving both algorithm and software engineer:

- Sample time(s)
- Variable type(s)
- Parallelization
- Failure case behaviour

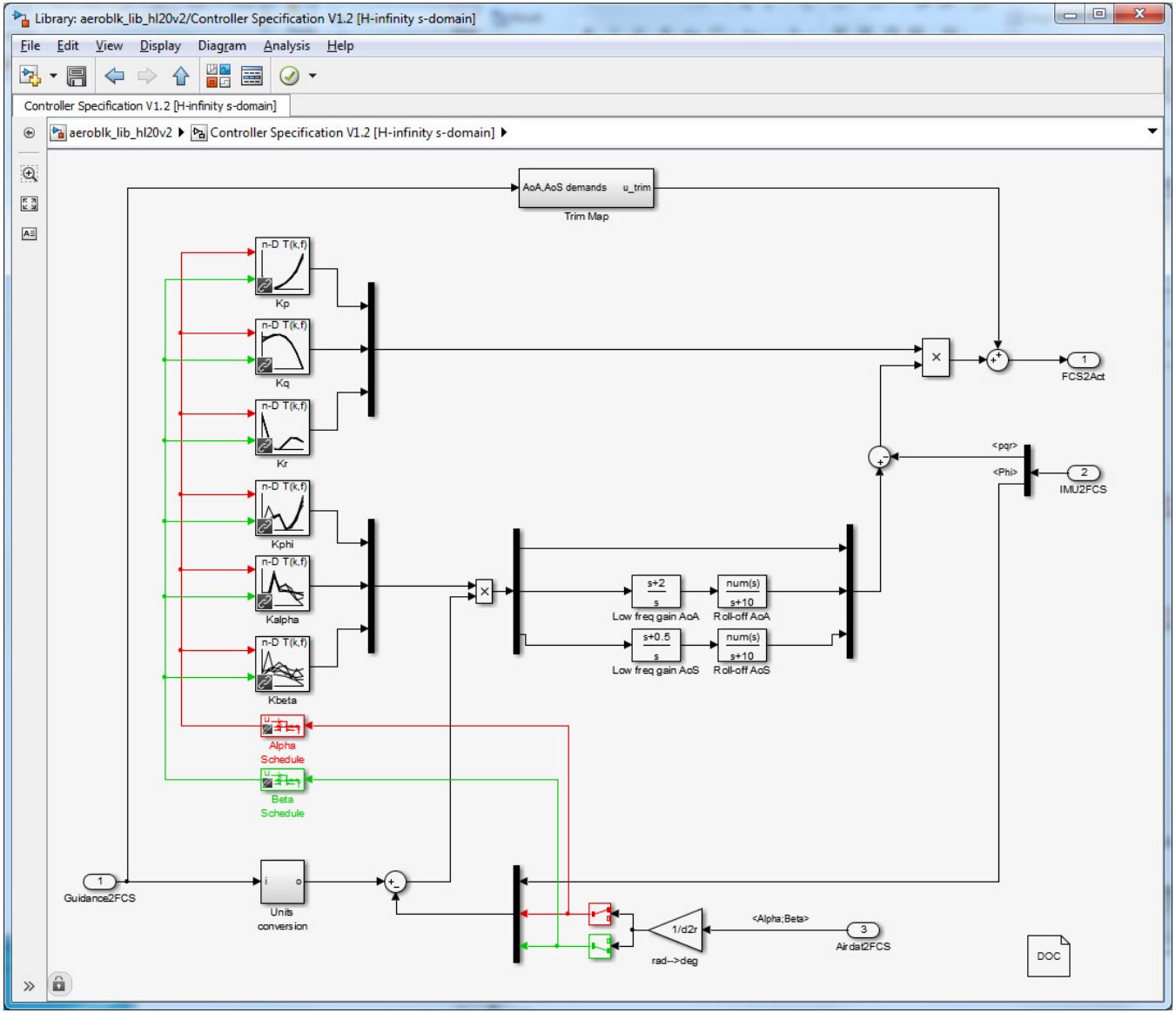

Impact of Simulink on process

- Software refinements added
- Algorithm engineer can still run and test it

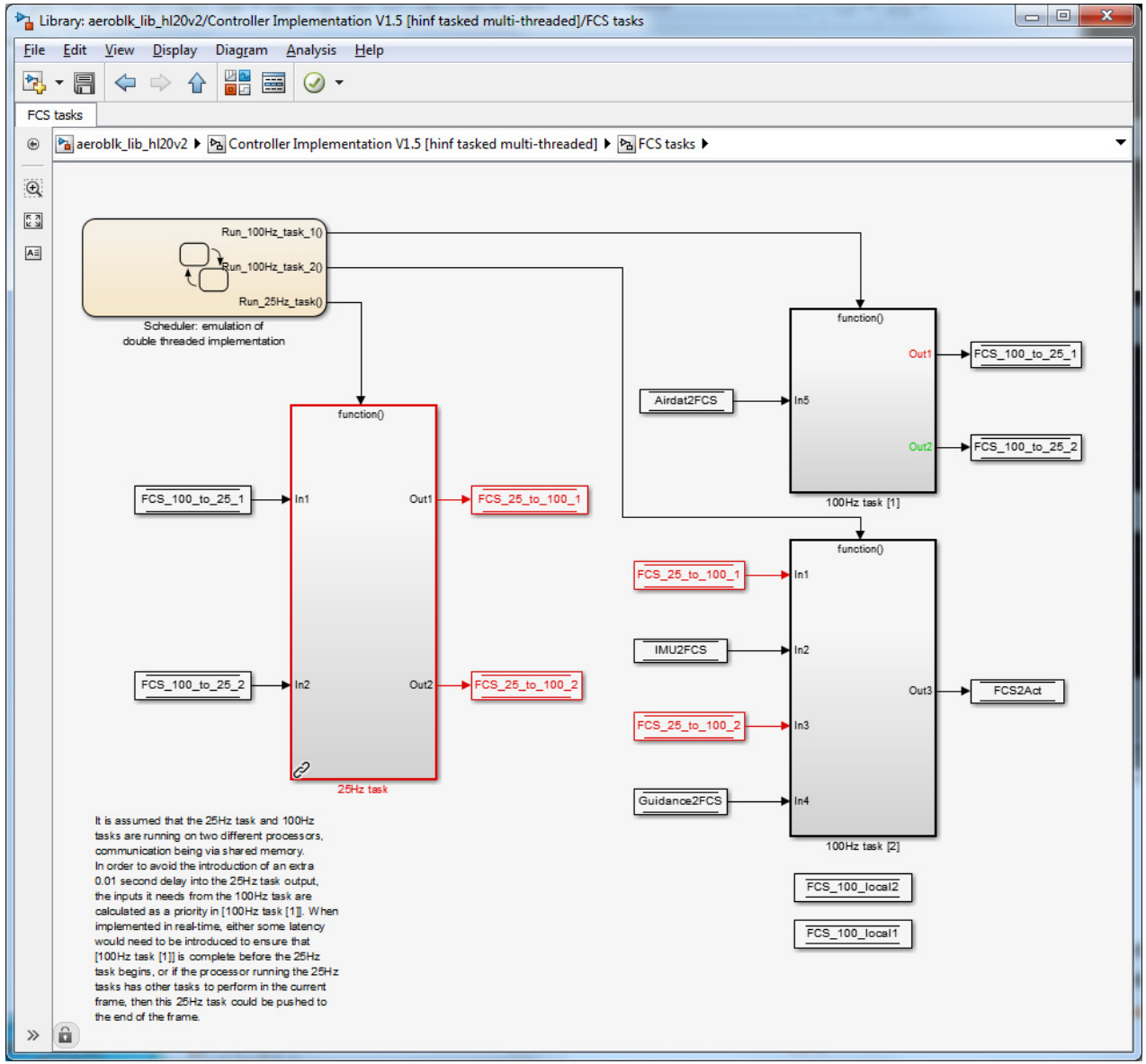

What about the physical system?

- Characteristics
  - Multi-domain
    - Mechanical
    - Electrical
    - Thermal
    - Hydraulic/pneumatic
- Design tasks
  - Technology selection
  - Performance prediction
  - Design optimization
  - Subsystem specification & implementation
  - Integration & test

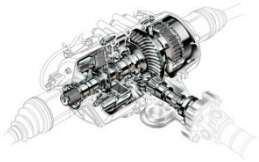

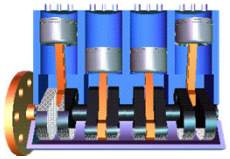

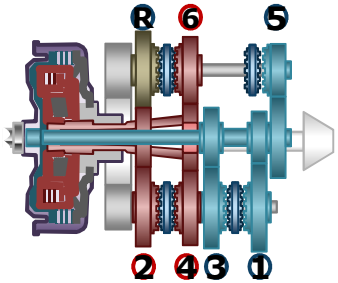

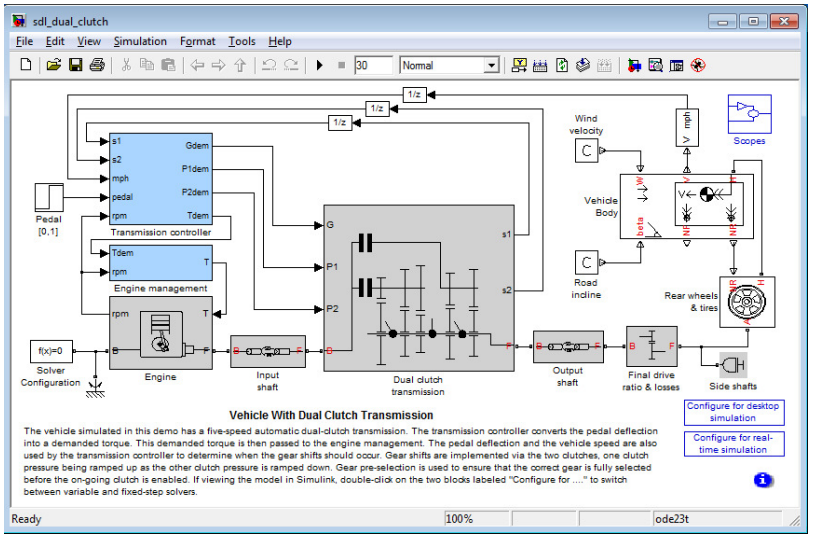

Using Simulink® for System Modelling

- Natural way to model many (sub)systems
  - Airframes
  - Some aspects of vehicle components
  - ***Systems defined by ODEs***

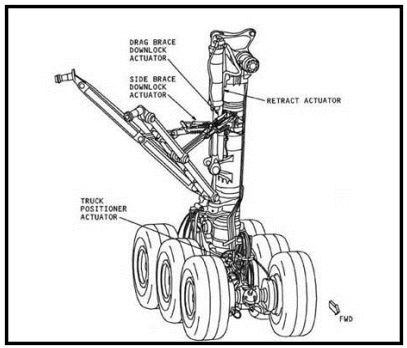

- Simscape™ extends Simulink to model
  - Mechanical
  - Hydraulic and flow-based systems
  - Electrical/electromechanical
  - ***Systems defined by DAEs***
- Unlike CAD/EDA tools, support system-level design
  - e.g. picking an actuation technology – hydraulic v. electric

Improved component and system engineer interaction

- Simulink & Simscape can provide a platform for component and system engineers to collaborate
- Three challenges
  1. What type of model is best for expressing an acceptable range of behaviours?
  2. Developing tools that support the design process
     - Component parameterization challenge
     - Support multiple levels of abstraction
  3. Enabling system design engineers to make more use of modelling and simulation
     - Without requiring input from the engineer who wrote the model(s)

Acknowledgements

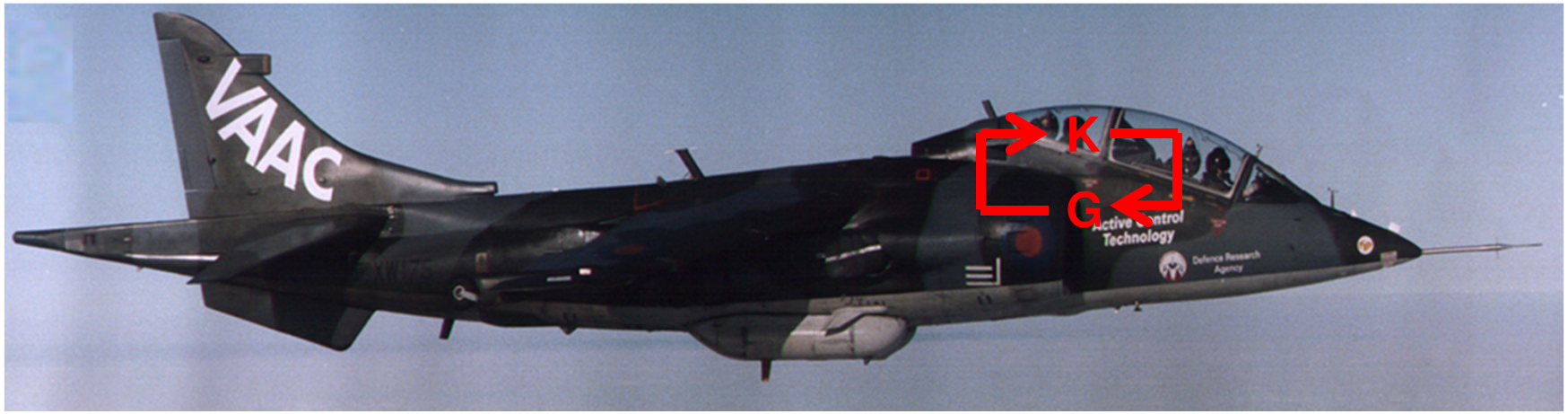

- Thank you Keith!